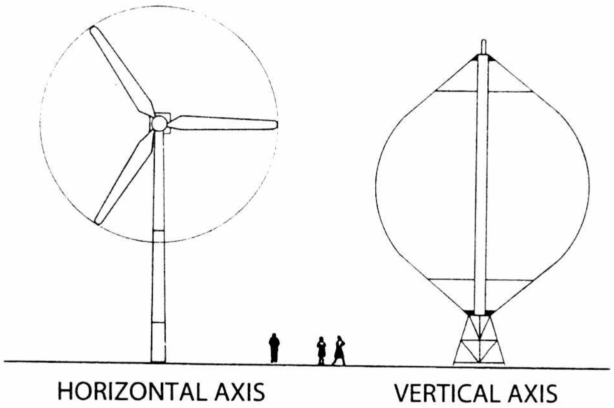

Figure 6-1. Horizontal- and vertical-axis wind turbines. Although the Darrieus or eggbeater turbine on the right (FloWind 19-meter model) spins about a vertical axis, it's equally efficient at harnessing the energy in the wind as the conventional wind turbine on the left (WindMaster 23.5-meter model). Both wind machines are typical of the medium-sized wind turbines used in wind power plants, and each is capable of producing about 200 kilowatts. (Pacific Gas & Electric Co.)

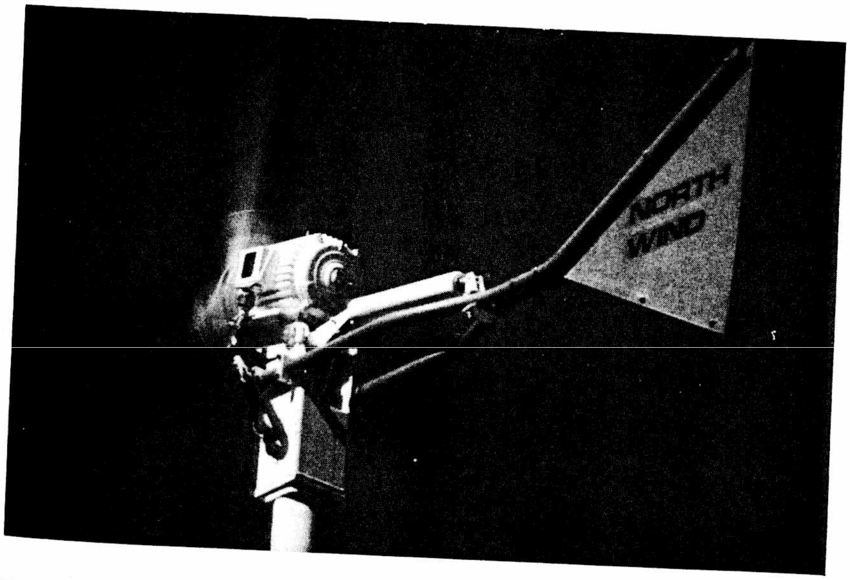

Figure 6-2. *Upwind rotor. Many small wind machines, such as this HR1, use a tail vane to orient the rotor into the wind. (Northern Power Systems)*

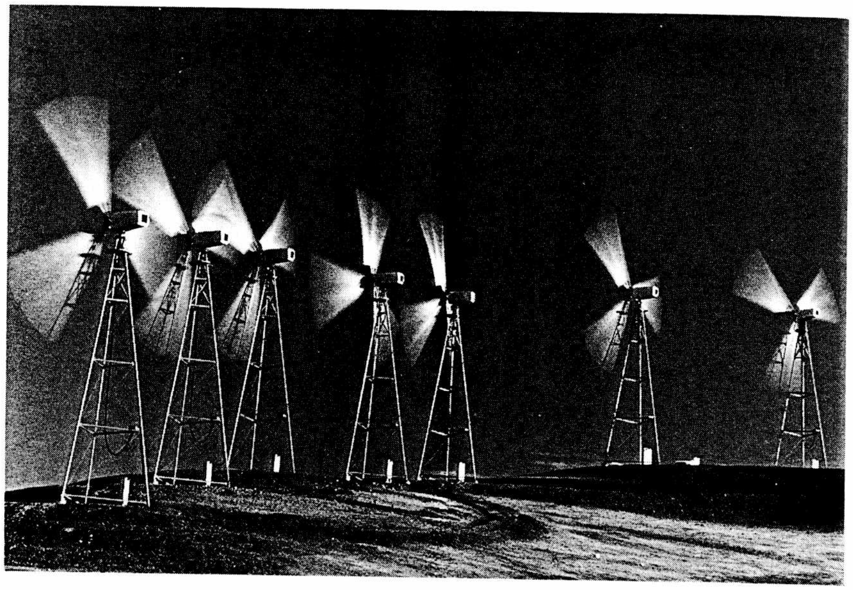

Figure 6-3. During the 1970s and early 1980s several manufacturers built wind machines with rotors downwind of the tower. Although several thousand are still in operation, most wind machines built today use rotors upwind of the tower. Shown here in the Altamont Pass is a cluster of U.S. Windpower's 56-100, a downwind machine nominally 56 feet (17.5 meters) in diameter. The rotor drives a 100-kilowatt generator.

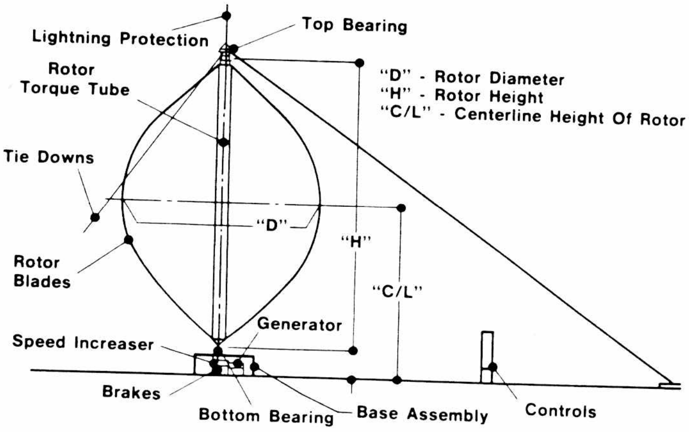

Figure 6-4. Detail of Darrieus rotor with nomenclature.

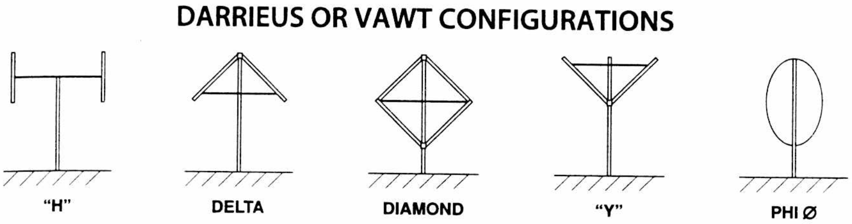

Figure 6-5. Darrieus configurations. There are several other Darrieus configurations besides the common "eggbeater" design.

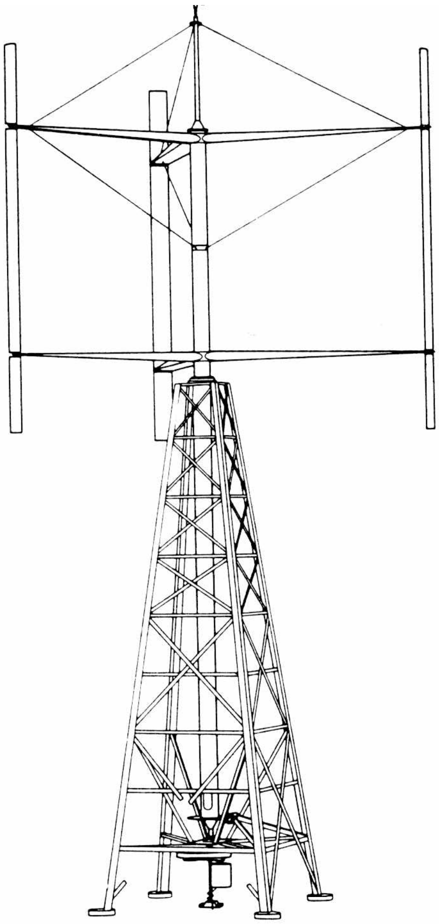

Figure 6-6. *Giromill or cycloturbine. Like all vertical-axis wind machines, this turbine could transmit mechanical power to ground level via a long shaft. The wind vane at the top of the rotor orients the blades with respect to the wind.*

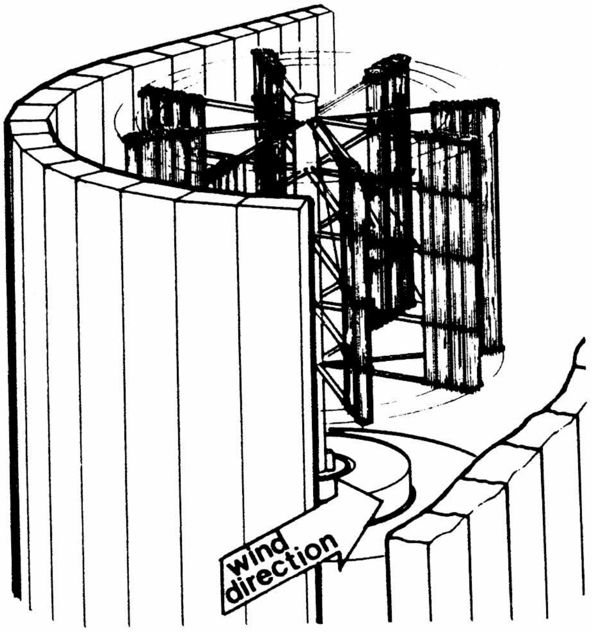

Figure 6-7. *Panemone. Simple drag device used in ancient Persia for grinding grain. The vertically mounted blades were made by fastening bundles of reeds onto a wooden frame. The surrounding wall guides the prevailing wind onto the retreating*

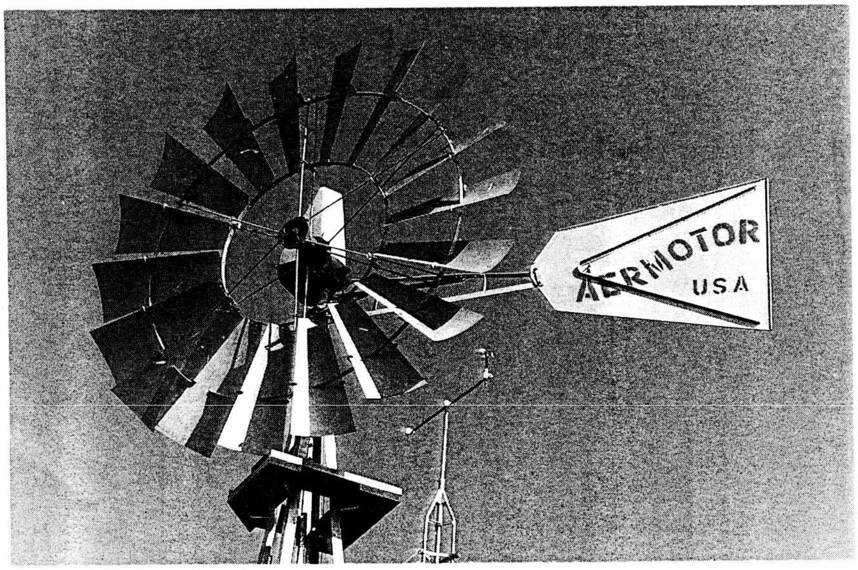

Figure 6-8. *Multiblade farm windmill. The curved metal blades resulted from the pioneering work of Thomas Perry, who conducted 5000 experiments on various "wheel" (rotor) designs. The Aermotor embodied all the principles Perry learned and was almost twice as efficient as the wood wheels then commonly in use. It also included "back gearing," which allowed the wheel to make several revolutions for each stroke. Since then, Perry's design has been widely copied.*

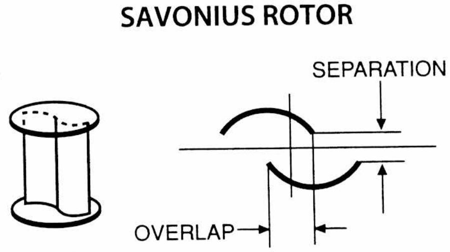
SAVONIUS ROTOR

Figure 6-9. *Savonius rotor. Another hybrid device where performance exceeds that of a simple wind machine dependent on drag alone. To achieve optimum performance, the two blades must be separated to permit some recirculation of flow. Because of its simplicity, a Savonius rotor is often the first choice of do-it-yourselfers.*

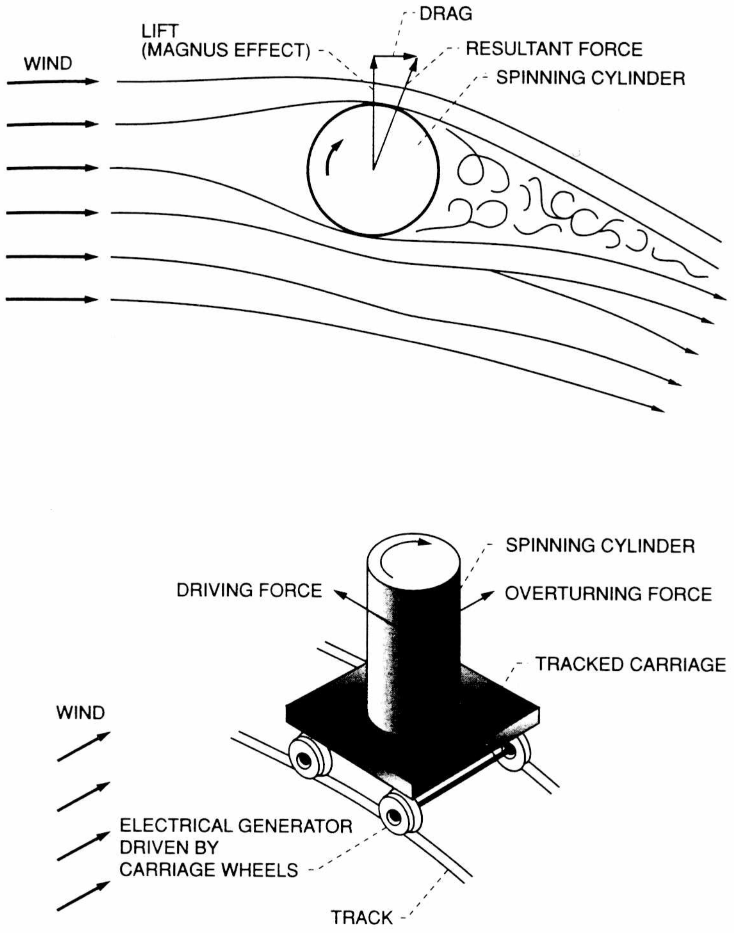

Figure 6-10. A hybrid device that uses the lift created by a spinning cylinder demonstrates the Magnus effect. Spinning cylinders have been used to drive several kinds of wind machines, including a flat car on a track.

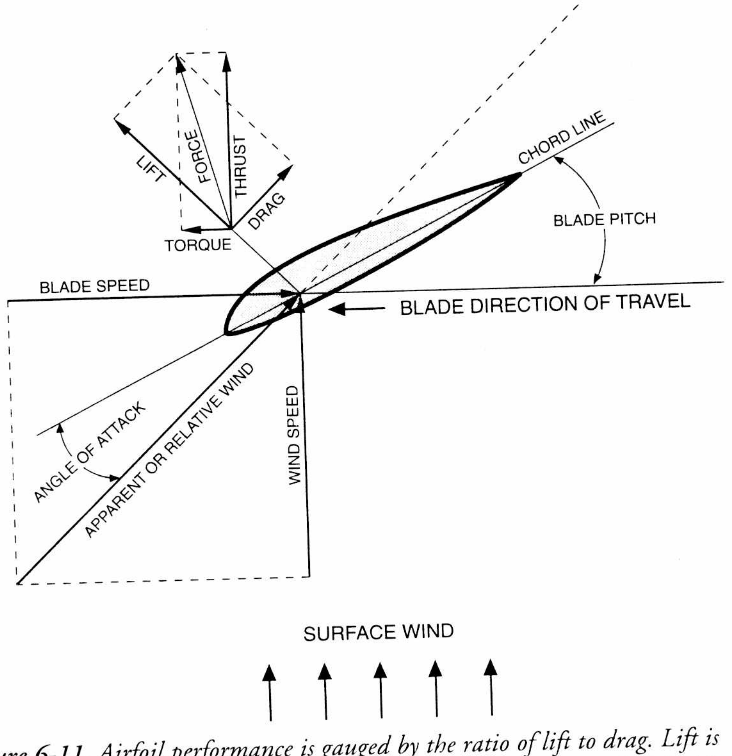

Figure 6-11. Airfoil performance is gauged by the ratio of lift to drag. Lift is determined by the angle of attack. The pitch of the blade, the speed of the blade through the air, and the speed of the wind control the angle of attack and, consequently, lift.

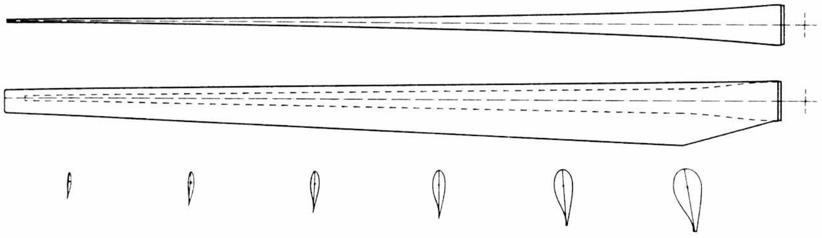

Figure 6-12. Taper and twist. Rotor blades on conventional wind machines often taper from the root where the blade attaches to the hub, to the tip. This saber-like shape minimizes solidity. Depending on the size and its construction, the blade may also be twisted to optimize performance along its entire length. (Vestas DWT)

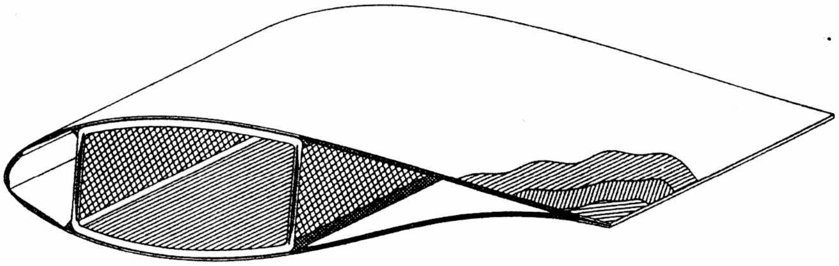

Figure 6-13. Blade cross section. Construction of a fiberglass blade found on many medium-sized wind machines. The central section is the spar, which provides the blade's principal structural support. (Vestas DWT)

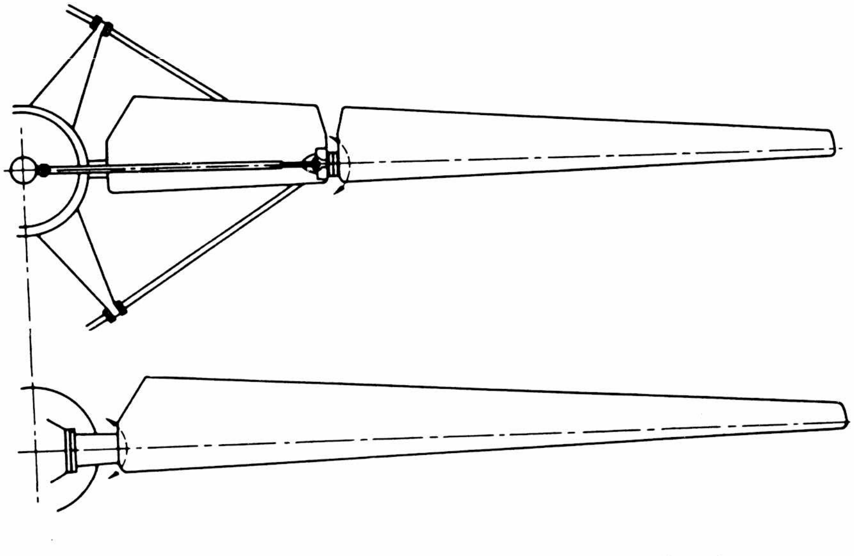

Figure 6-14. Blade attachment. Blades can be attached to the hub with stays, or cantilevered (attached at only one point). Early Danish wind machines used rotors braced with stays. All contemporary designs use cantilevered blades. (Danish Ministry of Energy)

direction, and when the blade passes through the tower's wake. Though engineers have long stressed its advantages and simplicity, no wind turbines using the technique have proven commercially successful.

Following the hub, the remainder of the drive train consists of the main shaft to which the rotor is attached, the transmission (where used), and the generator (see Figure 6-15).

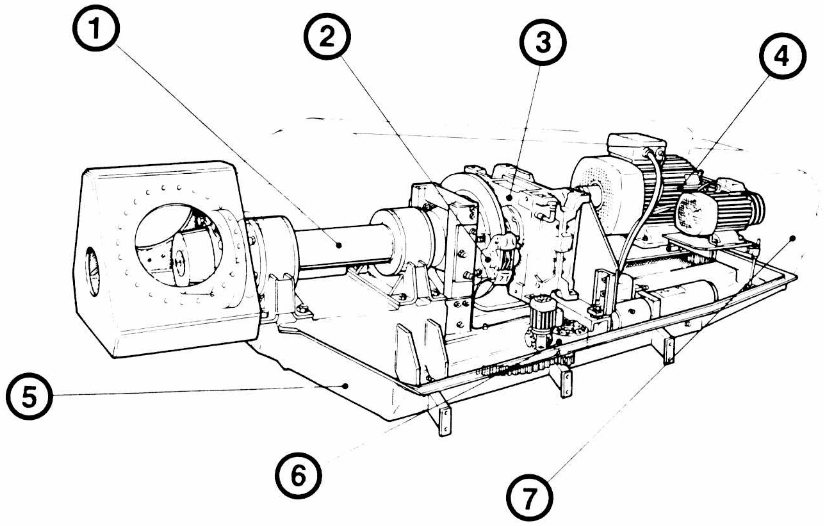

Figure 6-15. Drive train for typical medium-sized wind turbine. (1) Main shaft. Note that the bearings supporting the main shaft are independent of the transmission. On some wind machines the bearings in the transmission housing support the rotor. (2) Disc brake. Note position on the main shaft. On some wind machines the brake is located on the output side of the transmission. (3) Transmission. (4) Induction generator. Many wind machines, such as this one, commonly use two generators, or they use dual windings on a single generator. (5) Bedplate (frame or strongback). (6) Yaw or slewing drive for pointing the turbine into the wind. (7) Nacelle cover. (Vestas DWT)

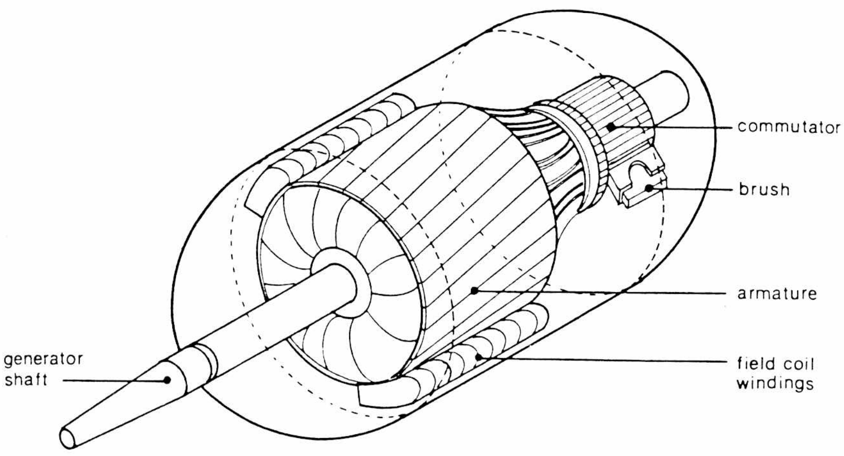

Figure 6-16. DC generator. Sketch of direct-drive generator on Jacobs windchargers. Power is drawn off the spinning armature through brushes. Some of this power is used to energize the field coils.

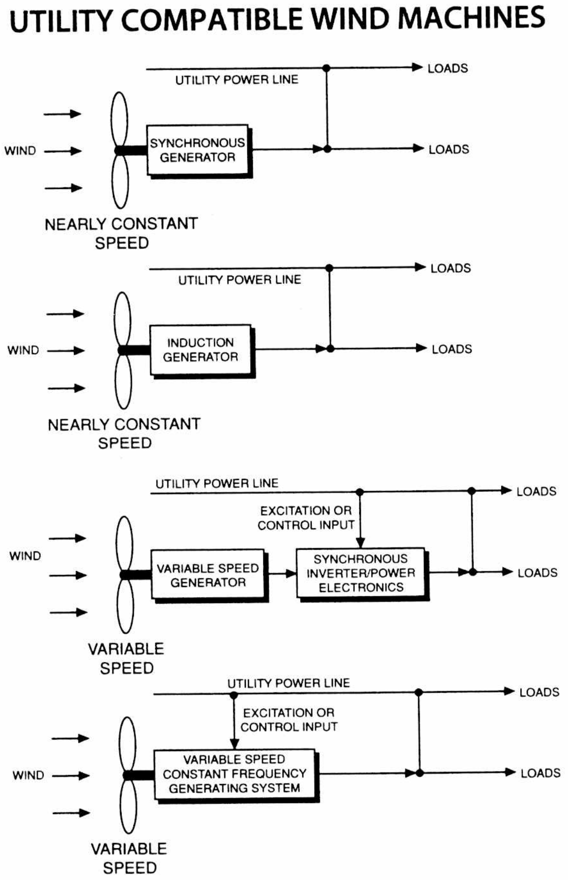

UTILITY COMPATIBLE WIND MACHINES

Figure 6-17. *Techniques for generating utility-compatible electricity. Most medium-sized wind turbines use induction generators. Most small (and now some medium-sized wind turbines as well) use power electronics with a variable speed generator. Very few wind turbines have ever been designed to drive true synchronous generators.*

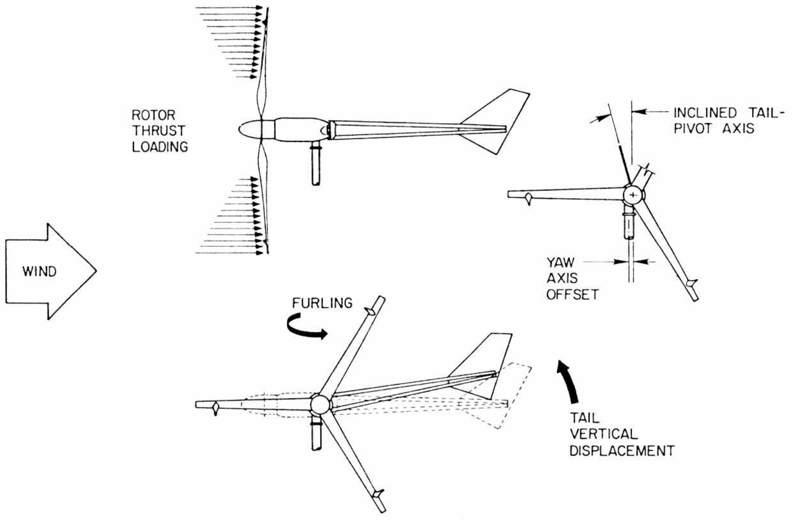

Figure 6-19. *Horizontal furling. This wind machine furls in high winds by swinging the rotor toward the tail. Note that the yaw tube (the tube connecting the wind machine to the tower) pierces the nacelle off-center. The rotor axis is offset from the yaw axis, causing the rotor to fold toward the tail in strong winds. Also note that the tail vane pivots about an inclined axis. The weights near the blade tips twist the flexible fiberglass blades to improve performance in low winds. (Bergey Windpower)*

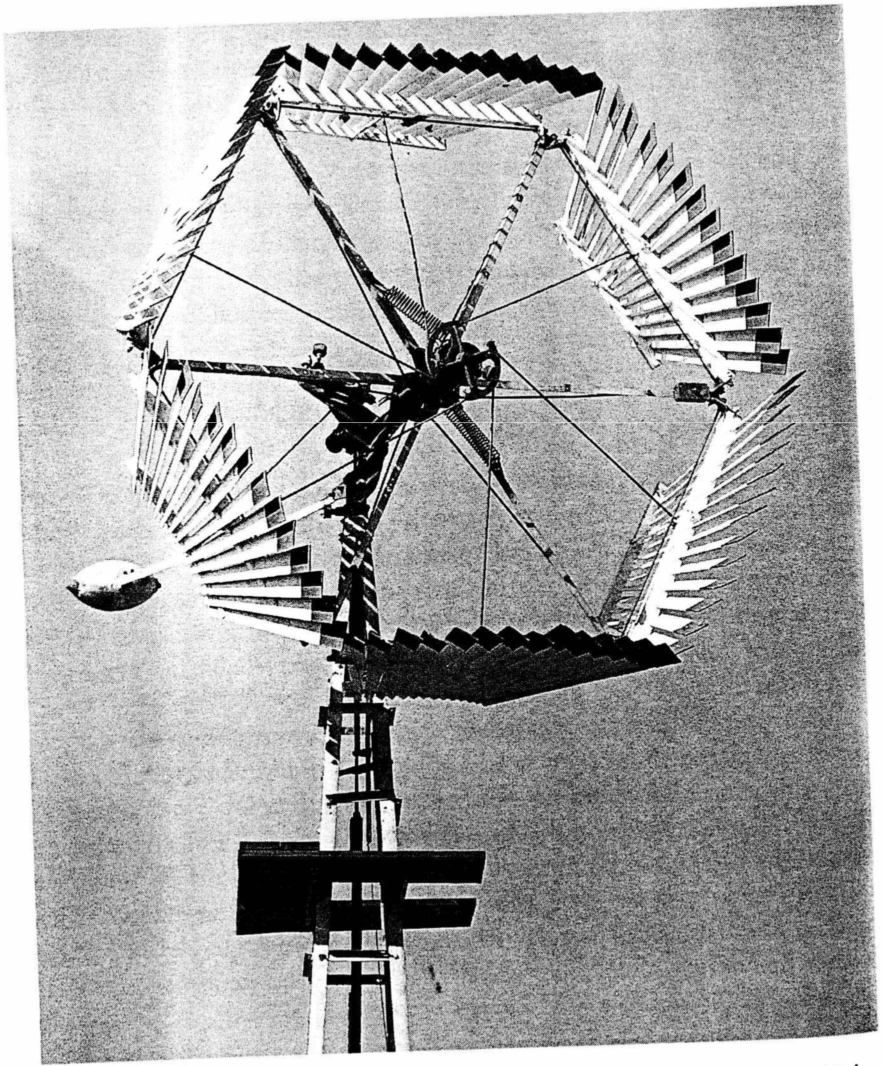

Figure 6-18. *Halladay's rosette or umbrella mill. Segments of the rotor furl in high winds by swinging out of the wind's path. The rotor also passively orients itself downwind of the tower.*

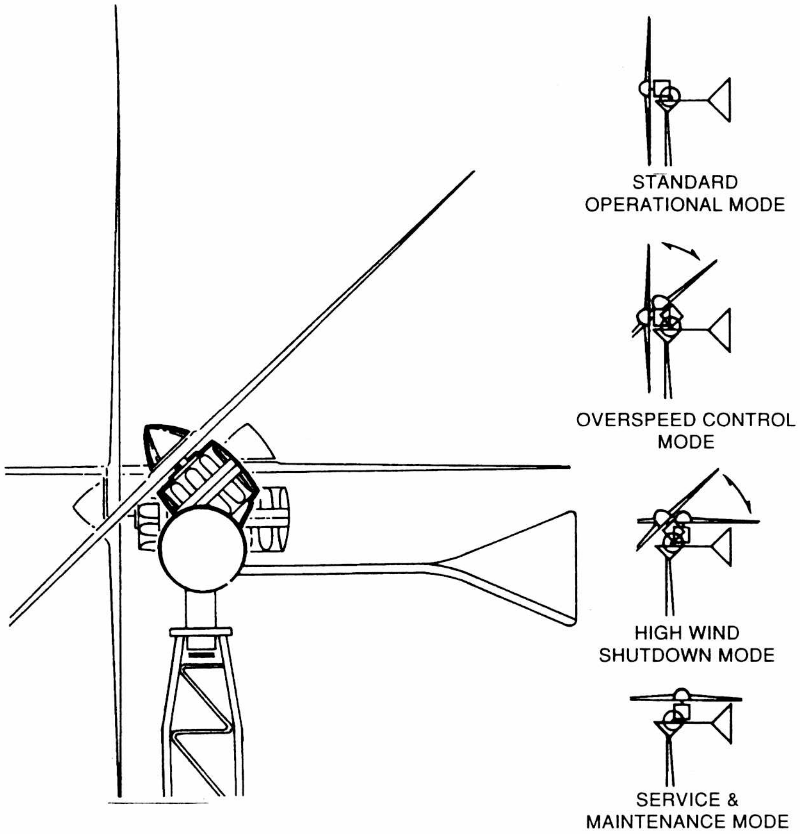

Figure 6-20. Vertical furling. In high winds Northern Power Systems furls their HR3 model by tilting the rotor skyward, following the example of a 1930s-era windcharger. A shock absorber dampens the rate at which the rotor returns to the running position. (Northern Power Systems)

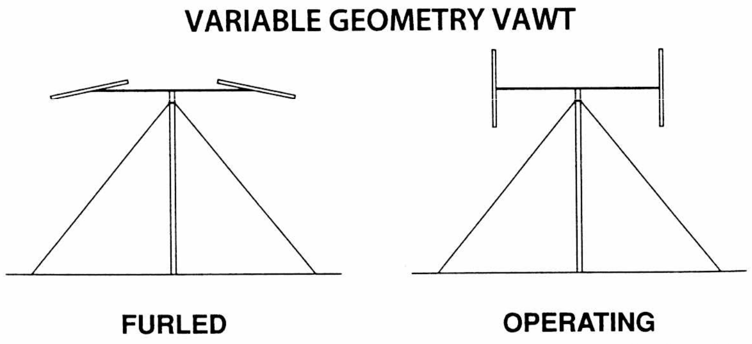

Figure 6-21. Variable-geometry H-rotor. In this ingenious design developed by Dr. Peter Musgrove of Reading University, the straight blades of the rotor are hinged so that they tilt toward the horizontal at high rotor speeds.

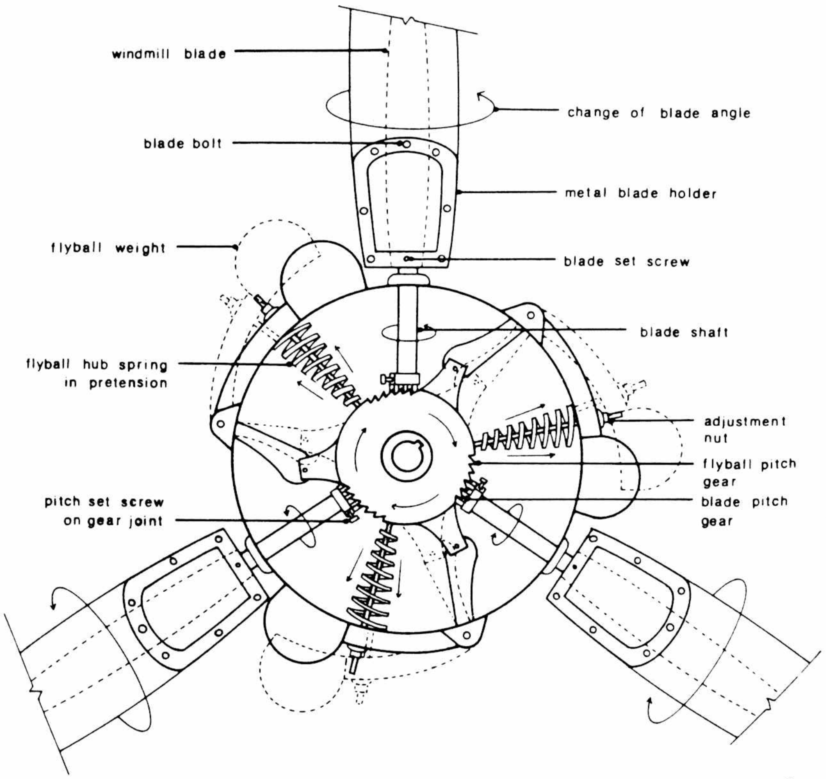

Figure 6-22. Jacobs flyball governor. Centrifugal force throws the weights away from the governor, changing the pitch of the blades via a mechanical linkage.

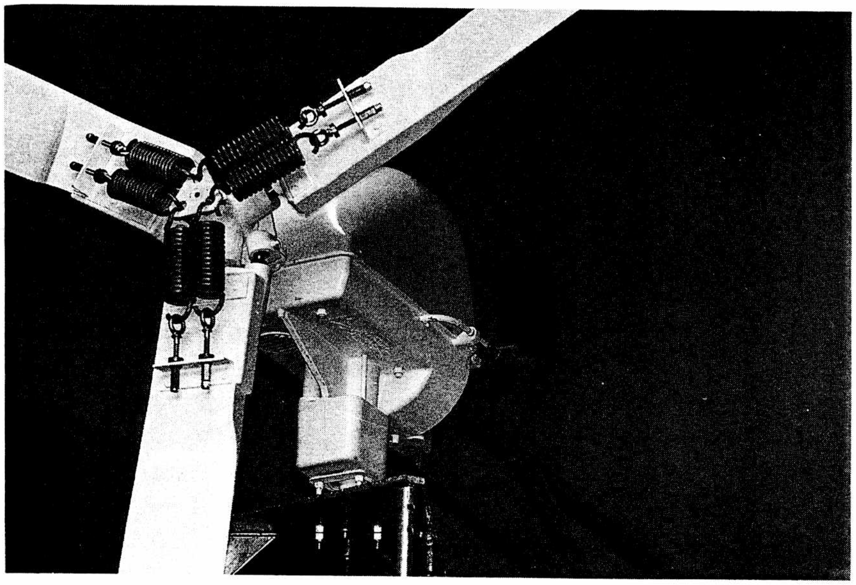

Figure 6-23. Blade-actuated governor. Many of the small wind turbines built during the 1970s used this design, patterned after later versions of the Jacobs windcharger. The force acting on the blades in high winds causes them to collectively change pitch.

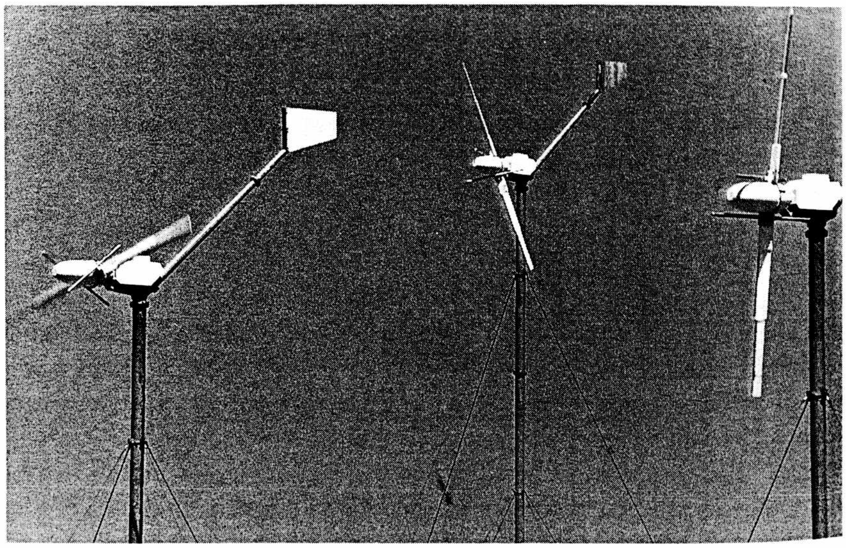

Figure 6-24. Pitch weights. The French Aerowatt is the only contemporary wind turbine that uses weights to change blade pitch in high winds.

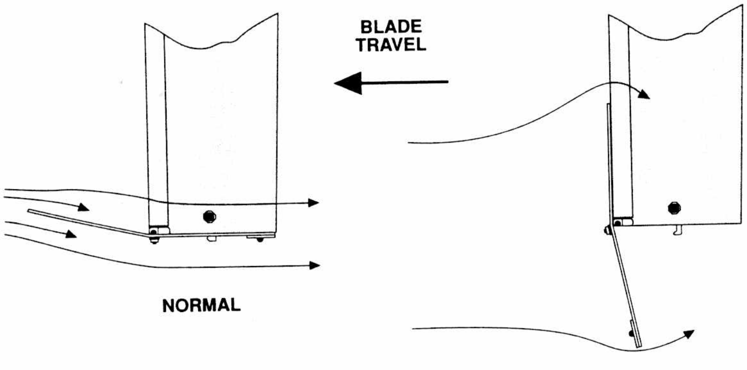

Figure 6-25. Enertech popularized the use of tip brakes for overspeed protection on downwind, induction wind machines. Tip brakes are often noisy, and rob power.

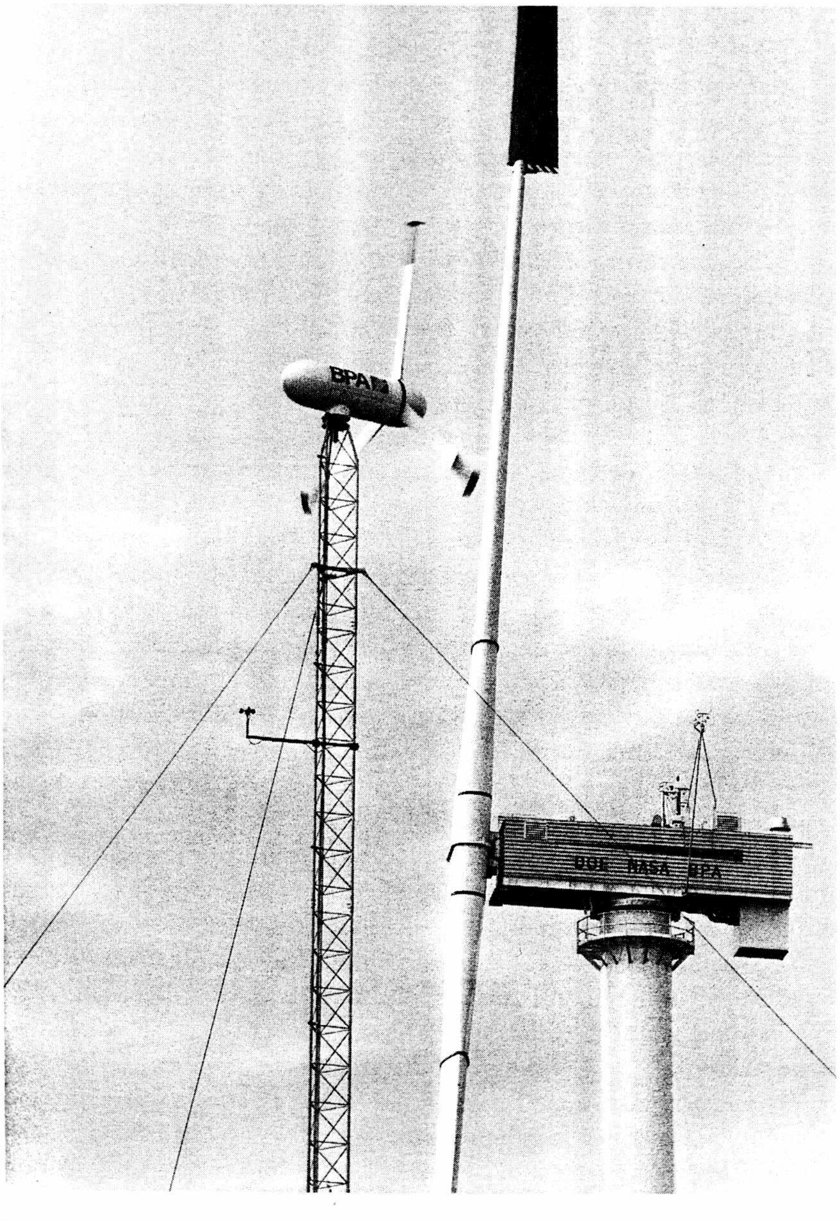

Figure 6-26. *Small Enertech wind turbine (1.8 kilowatts) in foreground used tip brakes for overspeed protection. The Boeing Mod-2 (2500 kilowatts) in the background controlled the pitch of the blade tip to limit power during normal operation and was used to stop the rotor. Neither turbine is currently manufactured.*

Table 6-1

Characteristics of Selected Small Wind Turbines

Manufacturer	Model	Rotor Dia. (m)	Swept Area (m^2)	Rated Power (kW)	Rated Wind Speed (m/s)	No. of Blades and Blade Material	Means of Control*
Marlec	Rutland 500	0.51	0.20	0.02	10.0	6 nylon	nc
LVM Products	Aero4gen F	0.87	0.59	0.07	10.3	6 nylon	nc
Marlec	Rutland 913	0.91	0.65	0.09	10.0	6 nylon	nc
Ampair	100	0.92	0.66	0.05	10.0	6 poly	nc
Hamilton Ferris	Windpower 100	1.10	0.89	0.10	11.2	2 GFRP	v
Southwest Windpower	Air 303	1.10	1.02	0.30	12.5	3 CFRP	nc
Southwest Windpower	Windseeker 503	1.50	1.81	0.50	12.5	3 wood	v
Hamilton Ferris	Windpower 200	1.50	1.83	0.20	11.2	2 wood	ab
LVM Products	Aero8gen F	1.60	1.89	0.22	10.3	3 wood lam.	h
Wind Baron	NEO Plus 5	1.60	1.94	0.78	12.0	3 wood	v
Atlantis	WB 20H	2.00	3.14	0.60	11.0	4 GFRP	v
J. Bornay	Inclin 250	2.00	3.14	0.25	11.0	2 CFRE	v
World Power Tech.	600	2.10	3.46	0.60	11.0	2 wood	v
Bergey Windpower	850	2.40	4.52	0.85	12.5	3 GFRP	h
SoWiCo	AeroCraft 1000	2.40	4.52	1.00	9.5	3 GFRP	p
LMW	LMW 1000	2.50	4.91	1.00	12.0	3 GFRP	p
Proven Wind Turbines	WT600	2.60	5.31	0.60	10.0	3 Poly	p
Giacobone	Eolux	2.70	5.73	0.60	12.0	3 GFRP	v
SOMA	1000	2.70	5.73	1.00	10.0	2 GFRP	v
Survivor Energy Sys.	S-3000	2.70	5.73	0.50	9.0	3 GFRP	v
World Power Tech.	H1500	2.70	5.73	1.50	12.5	2 CFRE	v
World Power Tech.	Whisper 1000	2.70	5.73	1.00	11.0	2 wood	v
J. Bornay	Inclin 1000	2.90	6.42	1.00	12.0	2 CFRE	v
LMW	LMW 1500	3.00	7.07	1.40	12.0	3 GFRP	h
Bergey Windpower	1500	3.10	7.31	1.50	12.5	3 GFRP	h
Proven Wind Turbines	WT2200	3.40	9.08	2.20	12.0	3 poly	p
Westwind	Standard	3.60	10.20	2.50	14.0	3 GFRP	h
World Power Tech.	Whisper 3000	4.50	15.90	4.50	12.5	2 GFRP	v
J. Bornay	Inclin 2500	4.70	17.35	2.50	12.5	2 CFRE	v
Northern Power Sys.	HR3	5.00	19.60	3.00	12.5	3 wood lam.	v
Vergnet	GEV 5.5	5.00	19.60	5.00	13.0	2 wood lam.	ps
Bergey Windpower	Excel	7.00	38.50	10.00	12.1	3 GFRP	h
Vergnet	GEV 7	7.00	38.50	10.00	11.5	2 wood lam.	ps
Westwind	Standard	7.00	38.50	10.00	13.5	3 GFRP	h
Wind Turbine Ind.	23-10	7.00	38.60	10.00	11.6	3 wood lam.	p,h

* nc=no control, h=horizontal furling, v=vertical furling, ab=air brake, p=pitch to feather, ps=pitch to stall, GFRP=glass reinforced polyester or fiberglass, wood lam.=wood laminate, CFRP=carbon fiber reinforced polyester, CFRE=carbon fiber reinforced epoxy, poly=glass fiber reinforced polypropylene **Note:** An expanded version of this table is available on diskette from Real Goods (1-800-919-2400). The expanded table lists nearly 100 wind turbines from 0.5 meters to 13 meters in diameter.

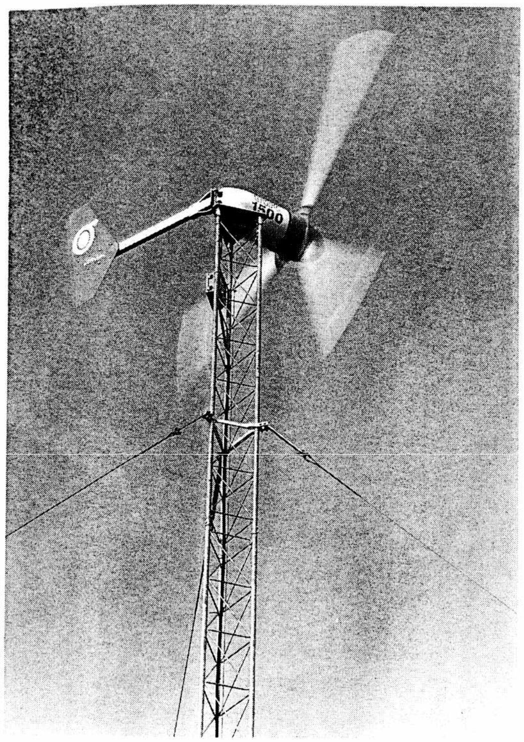

Figure 6-27. *The Bergey 1500 typifies today's integrated small wind machines: upwind, direct drive, and self-furling. The wind machine shown here is furling during high winds. Note the junction box between the guy bracket and the top of the tower. This box simplifies wiring the wind turbine to the cables running down the tower.*

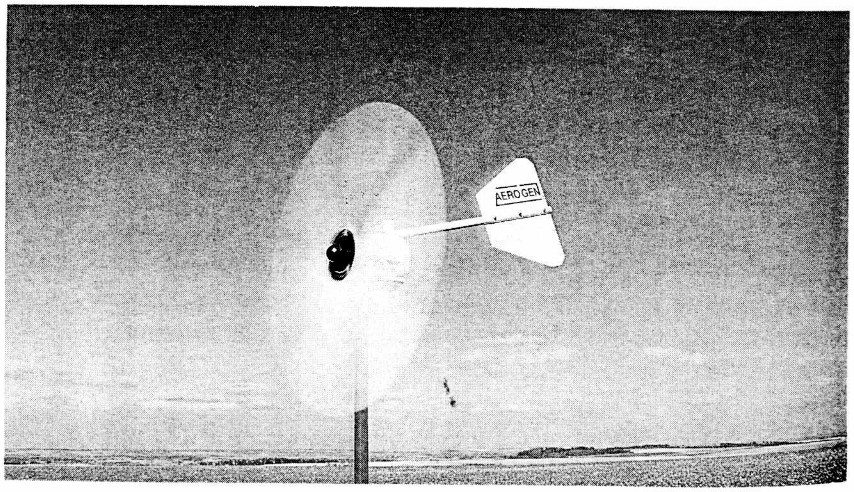

Figure 6-28. *The Aero3gen is one of the smallest wind machines on the market. This machine is 0.9 meters (2.8 feet) in diameter and rated at 50 watts. (L.V.M. Ltd.)*

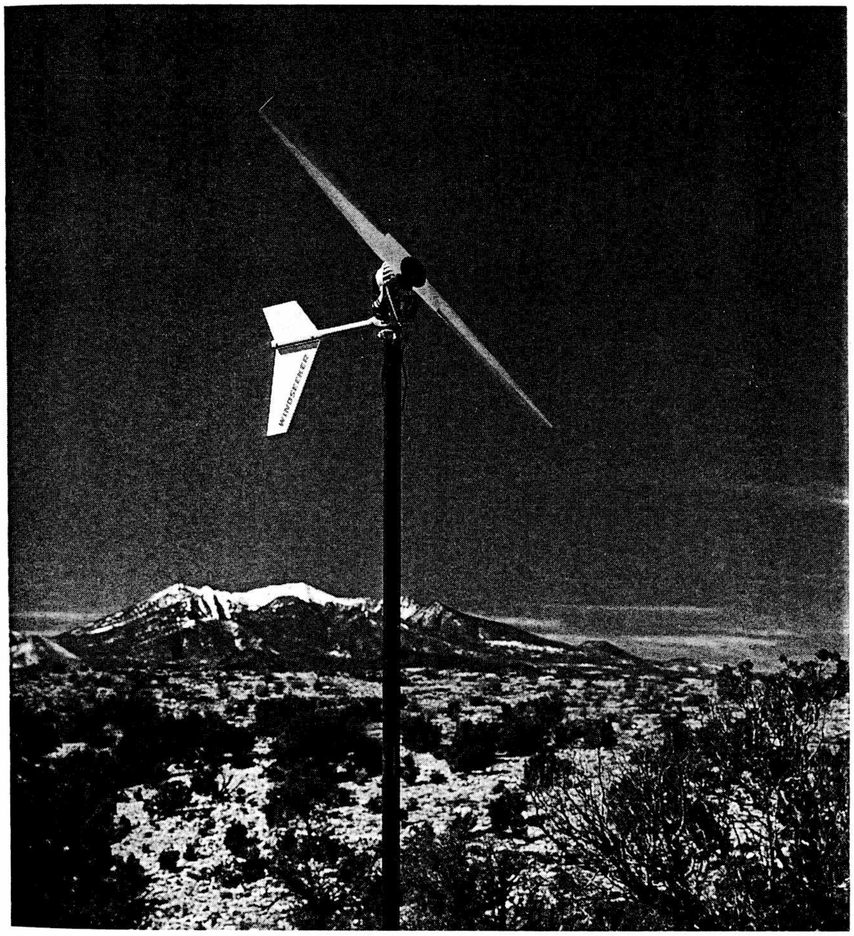

Figure 6-29. *Battery charger. Wind Baron's NEO 500 is a direct-drive, self-furling, micro turbine, suitable for small battery-charging applications. The Neo is 1.5 meters (5 feet) in diameter and produces 500 watts. (Wind Baron Corp.)*

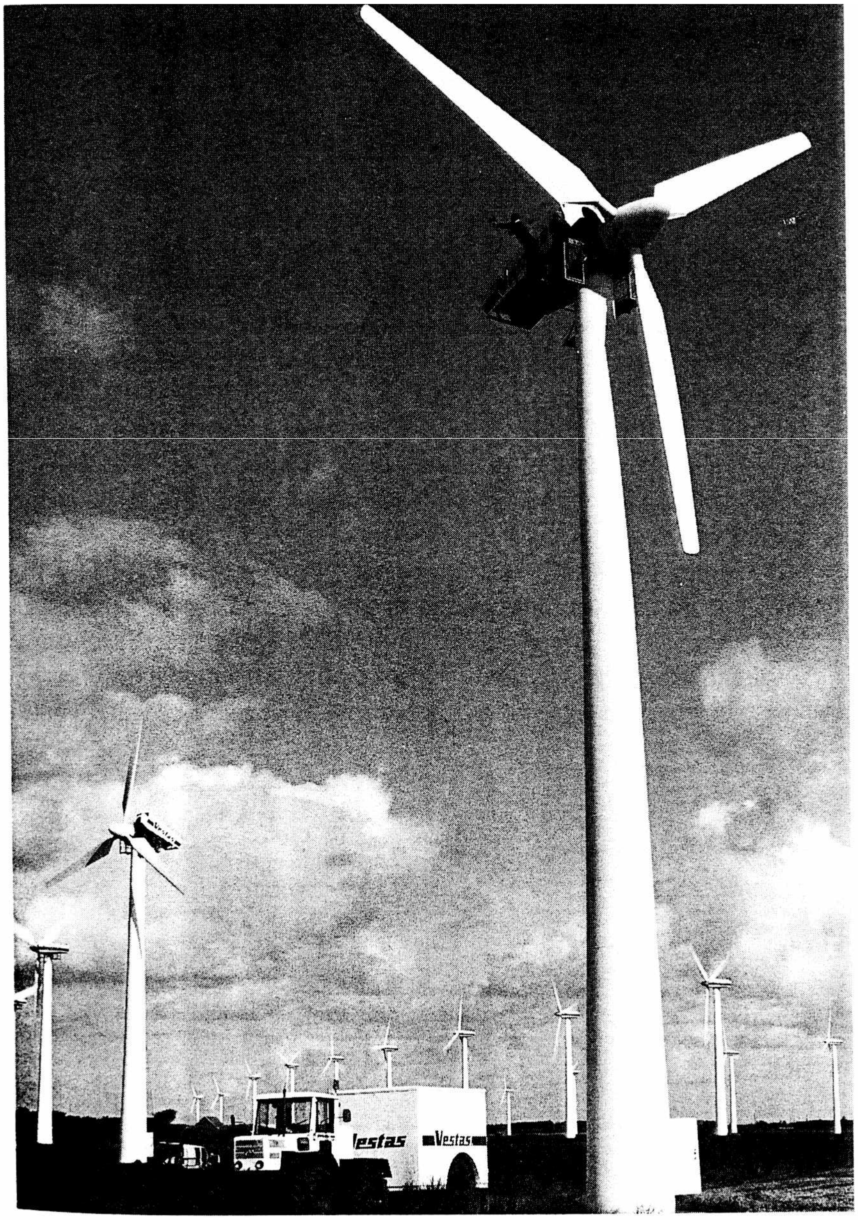

Figure 6-30. Danish wind power plant. Vestas wind turbines at Taendpibe-Velling Maersk, one of Europe's largest wind plants. This 100-unit project includes both stall-regulated and pitch-regulated wind machines 17-27 meters in diameter on the west coast of the Jutland Peninsula.

Table 6-2

*Characteristics of Selected Medium-Sized Wind Turbines Suitable for Home and Business**

Manufacturer	Model	Rotor Dia. (m)	Swept Area (m^2)	Rated Power (kW)	No. of Blades	Speed of Rotor	Rotor Control	Overspeed Control
Vergnet	GEV 10.25	10.0	79	25	2	c	s	variable pitch
Enercon	E-12	12.0	113	30	3	v	p	variable pitch
Sudwind	N1230	12.5	123	30	3	c	s	pitchable
Jacobs Energie	Aeroman	14.8	172	33	2	c	p	variable pitch
Enercon	E-18	18.0	254	80	3	v	s	pitchable tips
Lagerwey	LW 18/80	18.0	254	80	2	v	p	variable pitch
Micon	M300	19.5	299	55	3	c	s	pitchable tips
Ecotecnia	20/150	20.0	314	150	3	c	s	pitchable tips

* A more complete listing can be found in Appendix H;
c=constant speed; v=variable speed; s=stall regulated; p=variable pitch.